Product Type: M8 Moulded Connector

Product Name:M8A06Z-MMSRA-SP001B

Product Description: M8A moulded angled male 6-core shielded PUR wire 1 m

Product Size

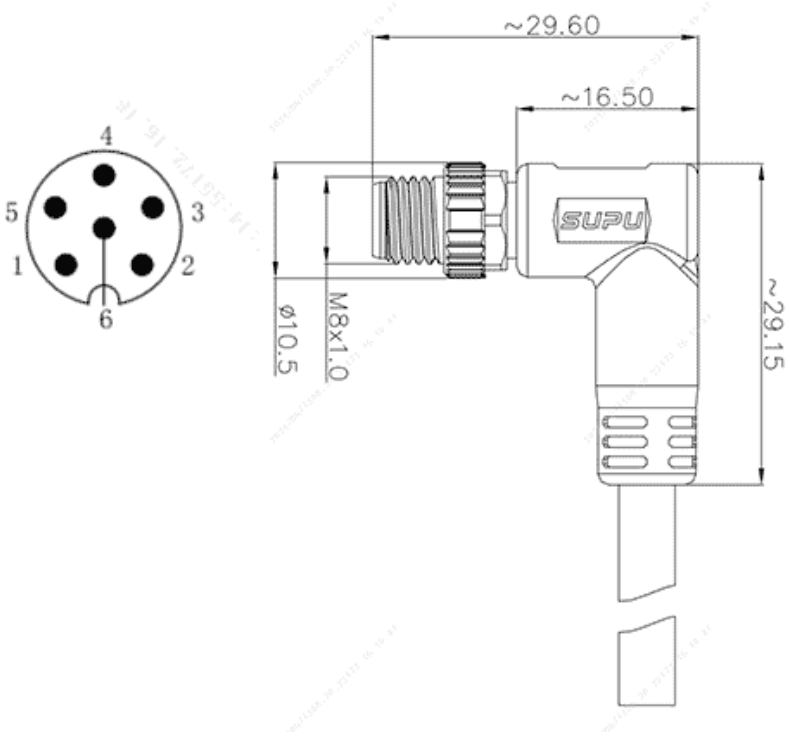

Parameters

SUPU ID	M8
Number of connections	6
Protection Level	IP67
Operating temperature range	-40~+85

Thread type	M8X1.0
Category	针式
Product type	预铸成型式
Coding	A
Connection method	预铸成型式
Shielded	YES
Mechanical endurance	≥100
Standards	IEC61076-2-104

Commercial data

Order No	M8A06Z-MMSRA-SP001B
Packing unit	PCS
Minimum order quantity	1

Ningbo SUPU Electronics Co., Ltd.

Address: No. 150, Xinxing 4th Road, High-tech Industrial Development Zone,

Cixi City, Zhejiang Province, China

Zip code: 315303

Switchboard: +86 574-63288158

Fax: +86 574-63288170

E-mail:supucontact@supu.cn

Service Hotline: 400-626-6336

Wechat

The right to modify data belongs to SUPU.